BT Module

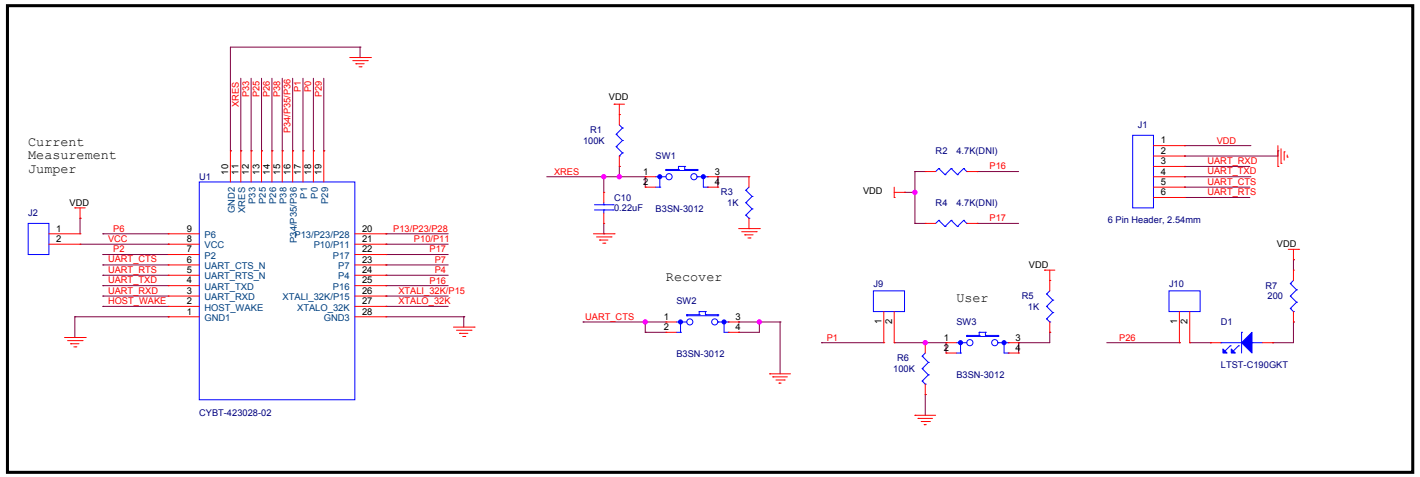

USB to Serial

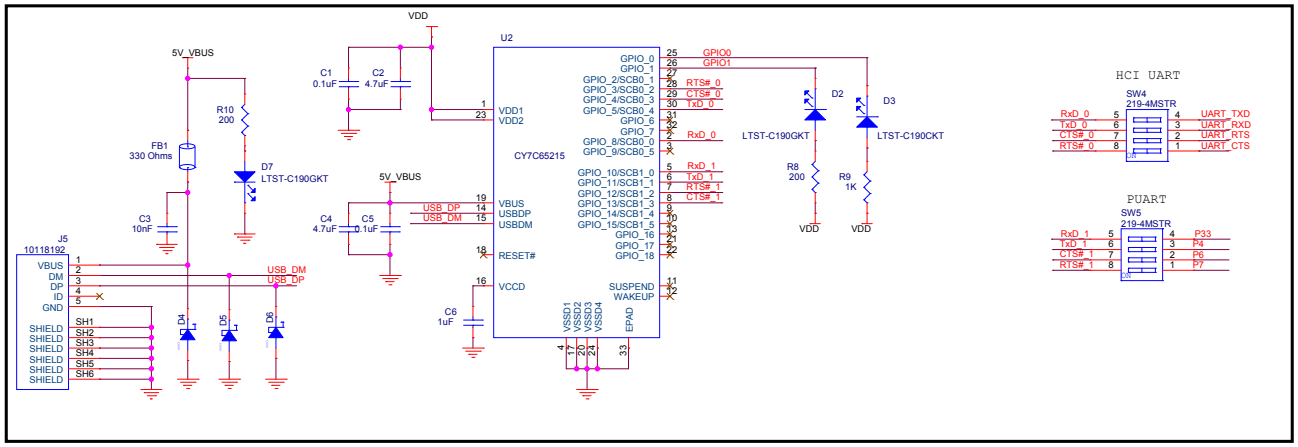

Arduino Connector

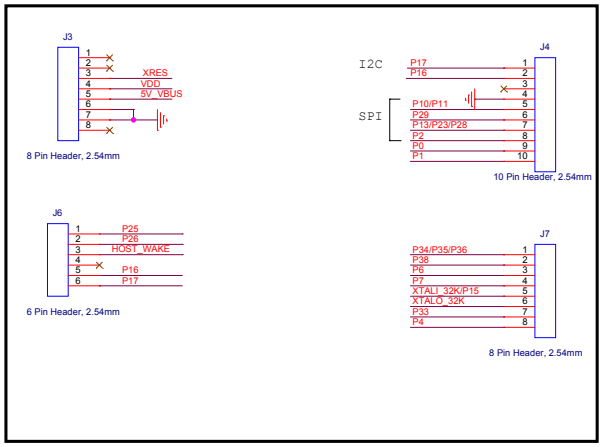

POWER

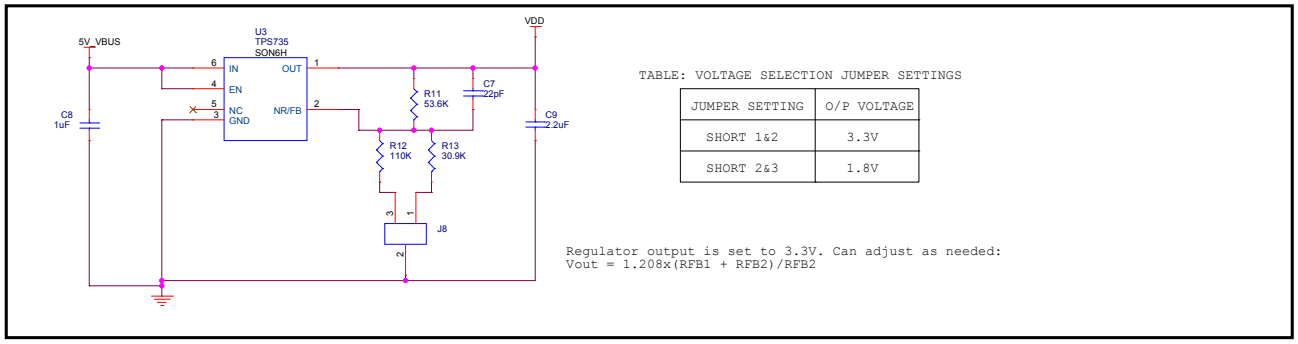

TABLE: VOLTAGE SELECTION JUMPER SETTINGS

JUMPER SETTING	O/P VOLTAGE
SHORT 1&2	3.3V
SHORT 2&3	1.8V

Regulator output is set to 3.3V. Can adjust as needed:
Vout = 1.208x(RFB1 + RFB2)/RFB2

Cypress Semiconductor		
Title: CYBT-423028-EVAL		
Size: C	Document Number: 630-20115-01	Rev: 1.1
Date: Friday, March 09, 2018	Sheet 1 of 1	